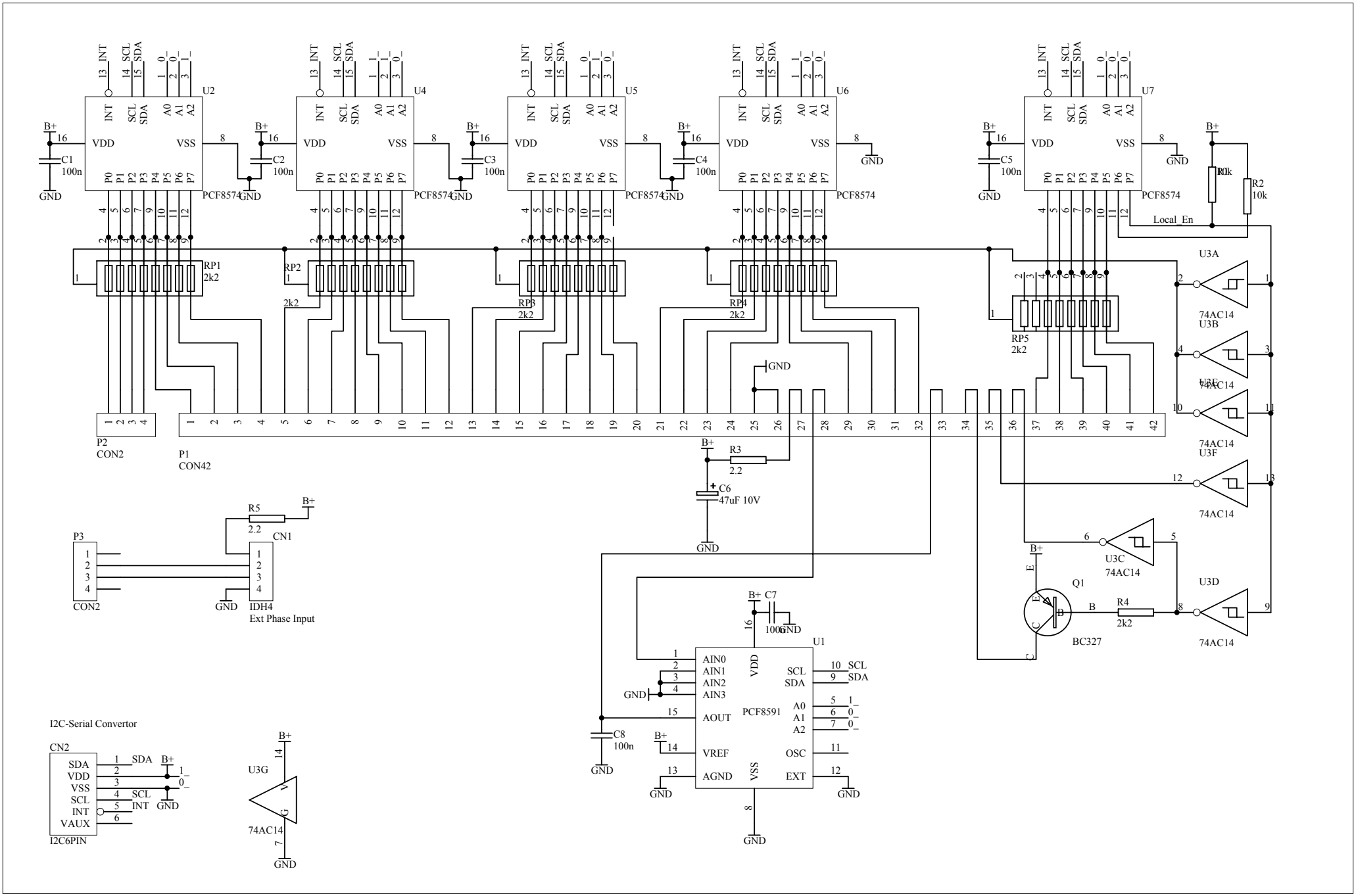
U2
U4
U5
U6
U7
PCF8574
INT
SCL
SDA
A0
A1
A2
VDD
VSS
P0
P1
P2
P3
P4
P5
P6
P7
B+
GND
C1
100n
C2
100n
C3
100n
C4
100n
C5
100n
R1
10k
R2
10k
Local_En
RP1
2k2
RP2
2k2
RP3
2k2
RP4
2k2
RP5
2k2
U3A
U3B
U3E
U3F
U3C
U3D
74AC14
Q1
BC327
R4
2k2
P2
CON2
P1
CON42
R3
2.2
C6
47uF 10V
R5
2.2
P3
CON2
CN1
IDH4
Ext Phase Input
C7
100n
U1
PCF8591
AIN0
AIN1
AIN2
AIN3
AOUT
VREF
AGND
VDD
VSS
SCL
SDA
OSC
EXT
C8
100n
I2C-Serial Convertor
CN2
SDA
VDD
VSS
SCL
INT
VAUX
I2C6PIN
U3G
74AC14