I2C for PC

USB & RS232 to I2C/SPI Adaptor & Controller

Features

- **Uses BL233B I2C-Serial IC**
- USB, RS232, TTL interfaces
- 3 separate I2C/SMBus busses
- 2x SPI bus
- 4x Dallas type 1-Wire bus
- Easy, Futureproof, ASCII control
- 5V and 3.3V On-board regulators
- Galvanic Isolation option
- Power-On, Watchdog and other autonomous macro actions
- Auto-switching USB/RS232
- No special DLL's, API's, Drivers
- Cross-Platform: Mac, Android, Linux, Windows, iOS etc
- USB Bus Power or 9V external
- Boxed (not bare PCB) 45x80mm

Applications

- ATE for I2C/SPI based equipment
- Evaluation of I2C and SPI chips
- Evaluation kits for I2C & SPI chips
- Rapid Prototyping & PnP design
- PC based instrumentation and control
- Reader for 1Wire serial numbers
- Galvanic Isolated I/O
- BluetoothLE version -iOS/Android
- Cheap and Easy Data logging
- PC and Network Watchdogs
- PDA/Calculator Analog/Digital I/O
- Lithium Battery controllers
- RS232 parrallel I/O
- Camera chip control
- Fibre Optic and Laser Module

Programmable

EEProm stores commands and settings

- Power On Reset actions
- Interrupt actions
- Watchdog timeout actions
- Macro's
- Autonomous actions

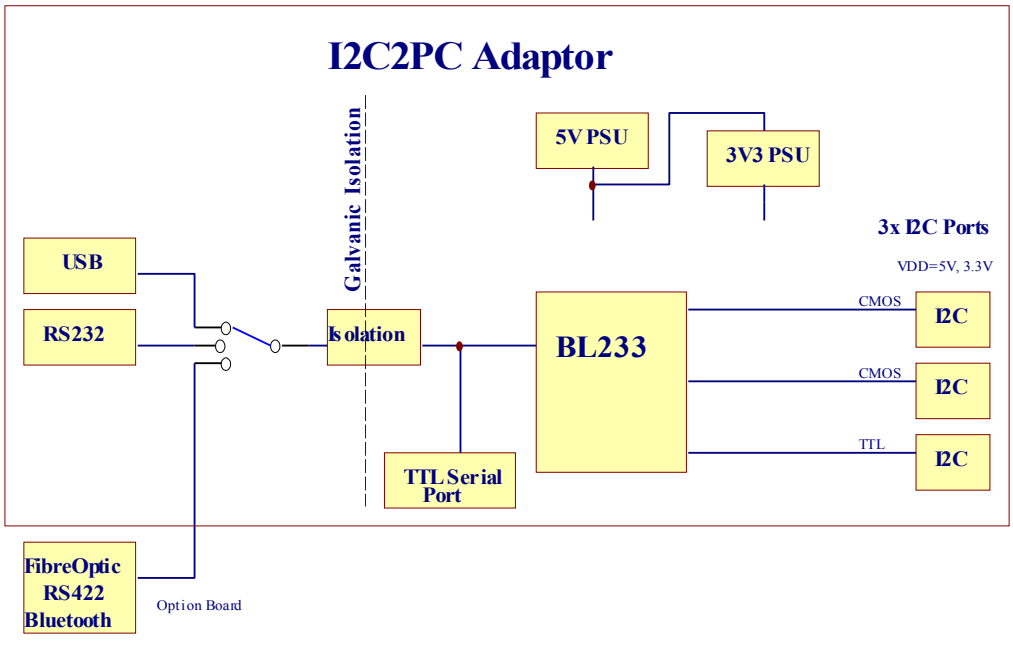

© 2002-17 Broadcast Equipment Ltd

ph +64 21 623-402 www.i2cchip.com sales@i2cchip.com

Digitally signed by Broadcast Equipment Ltd
Date: 2017.01.14 12:34:22 NZDT

I2C for PC

USB & RS232 to I2C/SPI Adaptor & Controller

Description

With both USB and RS232 serial interfaces this is a truly universal I2C/SMBUS/SPI/1-Wire interface, for the widest possible range of computing hardware, with the simplest and most portable software format.

*I2C2PC is **not** an I2C slave or an I2C monitor. It is a **master** on the I2C/SPI bus only.*

Building an I2C based application needs nothing more than *your* I2C chip, everything else is included.

There is an internal 5V and 3.3V power supply to run the interface and your target hardware. Simple systems will run from the USB bus power.

Unlike some competing products, it can sustain high baud rates, and has multiple I2C Busses
Compared to cruder solutions, it doesn't rely on bit-bashing PC software, ill defined I/O characterisics, or processor and OS dependent timing. Unlike single chip USB solutions it can guarantee timing of I2C transactions

Power-On-Reset actions can be set in EEProm so that systems are properly initialised when the PC is not present.
Watchdog actions can be programmed to automatically respond to PC failure.

Galvanic isolation can be installed where the I2C busses need to be isolated from the computer for noise, ground loop, or safety considerations.

An optional 3rd TTL interface is available for Fibre Optic, Bluetooth, RS422 and similar interfaces, or development for your own BL233 product.

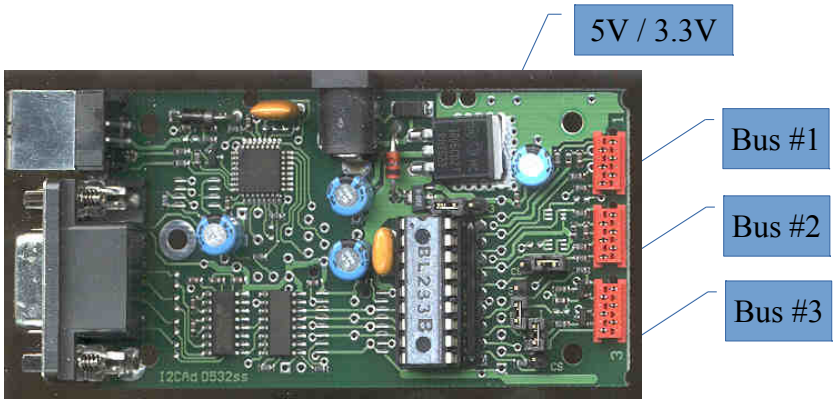

Figure 1 Adaptor with case removed

Table of Contents

1 REVISION HISTORY....4

2 COMMANDS....5

3 SOFTWARE INTERFACE....5

4 INSTALLING AND TESTING YOUR NEW ADAPTOR....5

5 JUMPERS....6

6 RS232-USB SELECTION....7

6.1 Aux Interface CN9....7
6.1.1 Regulator for Aux Interface *8*
6.2 Bluetooth on Aux....8

7 I2C BUS CONNECTOR....8

8 CS AND INTERRUPT PINS....9

9 BUS DRIVE AND PULLUPS....9

10 POWER SUPPLY....10

10.1 USB Bus Powered....10
10.2 I2C Bus Power Selection 5V / 3.3V....10
10.3 Local AND USB Power....11

11 GALVANIC ISOLATION....11

11.1 Fitting Isolator Yourself....12
11.2 Galvanic Isolated Power....12
11.3 USB Power only Cable....13
11.4 External 5V to PC Side....13
11.5 Fitting a DC-DC Convertor....13
11.6 Defeating Isolation....14

12 OTHER MODIFICATIONS....14

12.1 Low Voltage Regulator for Bus 3....14
12.2 Daughter Board Connector....14
12.3 USB Leds and Power Led....15
12.4 USB EEProm....15

13 EXAMPLE APPLICATIONS....15

13.1 8 Bit I/O Port....15
13.2 Simple Data logger with no PC Software....16
13.3 Simple RS232 I/O Port....16
13.4 RS232 to LCD Module adaptor....16
13.5 Huge RS232 Parallel Port....16

13.6 READING A DS2401 1 WIRE SERIAL NUMBER 17
14 USB 17
14.1.1 Changing Comport Numbers *17*
14.2 SHOULD I USE USB OR RS232? 17
15 FAQ 18
16 FACTORY TEST PROCEDURE 19
16.1 VISUAL INSPECTION 19
16.2 DC SUPPLY CURRENT AND POWER SUPPLY 19
16.3 RS232 19
16.4 USB 20
16.5 I2C BUS 1 20
16.6 I2C BUS 2 20
16.7 INT PIN 20
17 ROHS, REACH, & LEAD FREE 20
18 ORDERING INFORMATION 21
19 OEM VERSIONS 21
19.1 RS232/USB TO TTL INTERFACE 21
20 SCHEMATICS AND DRAWINGS 21

1 Revision History

Rev	Date	Changes
43		
51	24 Feb 2008	
58	20 March 2014	Add CN10 pinout
60	25 June 14	Add new power supply dc-dc convertor types, old type obsoleted.
69	15 Sept 15	Improve Galvanic section, new photos, remove some obsolete material. Schematics, PCB and Mechanical drawings embedded

2 Commands

Read the BL233 B PDF Datasheet for a full description of commands and operation.

There are application notes for BL233 and i2c2pc that clarify specific applications, and other information in the PDF Library

3 Software Interface

The I2C-2-PC appears as a serial port device when either the USB or RS232 are used. (Linux, Windows, Mac).
No special API's or DLL's are required to access it. Almost any programming language can be used including Labview. Our customers are using it with

- VB
- C, C++
- Labview
- Matlab
- Delphi
- Java
- Python
- Perl
- PDA's
- Batch files

4 Installing and Testing Your New Adaptor

The I2C2PC is normally shipped set to **57,600 bd N81, RTS/CTS handshake**.

If you have Galvanic Isolation fitted, see sec 11 below.

The jumpers are set 5V, and IRQ on the I2C buses.

- Download, Install **Realterm** from: http://www.i2cchip.com/realterm
  Documentation is at http://realterm.sourceforge.net/
  View the Videos Starter Kit Introduction Video, http://www.i2cchip.com/videos
- Use the "Realterm I2C USB" shortcut to start up Realtern. This will automatically configure the port settings to hardware handshake RTS/CTS.
- Ensure the Port Select jumper is in AUTO position (ie not fitted). The port will default to RS232 when the USB is not connected.

- If you are going to use the USB, install the FTDI driver software for Windows.
  http://www.ftdichip.com/Drivers/VCP.htm

- Connect USB cable. Select port \VCP0
- *or* Connect a DB9 serial extender (m-f) cable (not a cross over cable) to the RS232 (and select comport) . Apply 9V Centre positive 2.1mm power supply.
- When you apply power you should see a default startup message like "`HI I2C v118`". Note you probably won't see this when using USB power, as the message is normally sent before the USB bus has enumerated.
- Type "?". The I2C2PC should reply with 2 hex bytes of status eg "18"
- All units are fully tested in our ATE system. It is unlikely it is not working out of the box.

5 Jumpers

The back of the PCB has silkscreen of the jumpers with their functions labelled.

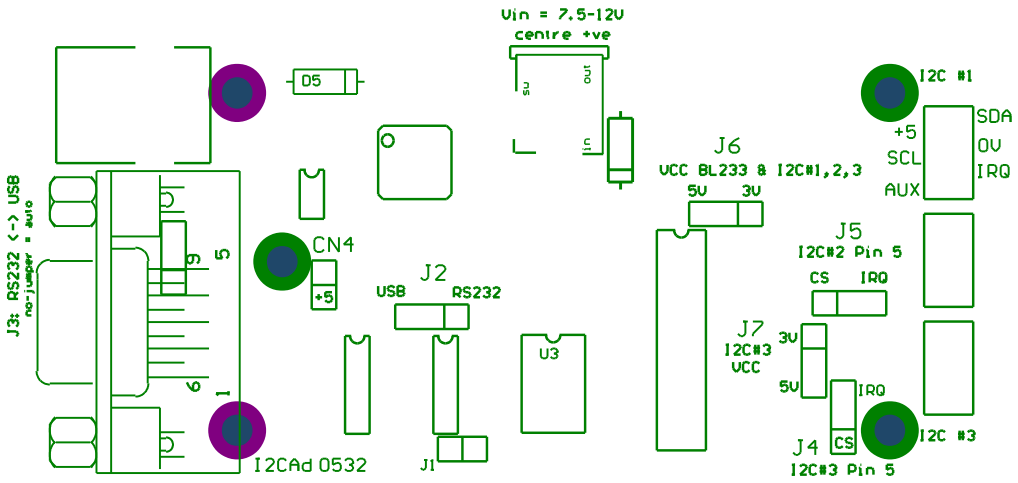

6 RS232-USB Selection

See also "USB" sec 14 below and "Should I use USB or RS232?" sec 14.2 below

Selector J2 is inside the adaptor [1]:

- Jumper toward DB9: Always RS232
- Jumper toward USB connector: Always USB
- No Jumper: Autoselect USB when bus enumerates, RS232 otherwise.

J1	*J2*	*Mode*
none	none	Autoselect USB/RS232 Selects USB when it is enumerated
none	USB	USB only
none	RS232	RS232 only
fitted	none	invalid
fitted	USB	AUX Only
fitted	RS232	invalid

6.1 Aux Interface CN9

CN9 is a third serial interface that can be manually selected instead of RS232 and USB. It is selected by installing link J1, and the setting J2 to USB.

****** WARNING: While it uses a 6 pin micromatch it is completely incompatible with the I2C bus. Do not plug into the wrong socket ******

You can use it to add a 3rd interface, eg Bluetooth or Fibre or RS422 or TTL
It can be directly connected to the logic level[2] pins of a UART or microprocessor serial pins. For example you can connect it direct to the serial pins of a Linksys WRT54G Linux router. It is directly compatible with 3V and 5V devices.
This is also ideal where you plan to use the BL233 in your own design.

---

1 Boards before 2011 had J3 fitted at edge of case. After 2011 only J2 is fitted internally.
Boards before May 2003 are:
Jumper toward DB9: Always USB
Jumper toward USB connector: Autoselect USB when enumerated, RS232 otherwise.
No Jumper: Always RS232

2You cannot connect CN9 directly to RS232. RS232 is inverted and has high voltage levels

6.1.1 Regulator for Aux Interface

If you need a lower voltage (eg 3.3V) to power the device on CN9, there are 3 pads labeled CN4, adjacent to CN9 which can take a Microchip MCP1700-XX-T0 or Holtek HT73XX regulator in to-92 package.
Cut track between Pin1&Pin 3. Fit regulator, Fit C13 next to U3.

6.2 Bluetooth on Aux

BLE Adaptors are available from webstore. See I2C2PC_Bluetooth.pdf for more details.
Bluetooth Low Energy and Bluetooth modules can be directly connected to CN9. Set the module to 57600bd using its AT command set, and you are ready to go.

#	***I2C2PC CN9***	#	***Sparkfun Blue SmiRF Extended***
1	VCC (+5)	2	PWR
2	CTS (out)	1	CTS-I
3	RXD (out)	5	RX-I
4	TXD (in)	4	TX-O
5	RTS (in)	6	RTS-O
6	GND	3	GND

7 I2C Bus Connector

The I2C Bus connector used is a *MICRO-MATCH* by AMP. Either 4 or 6 way can be used. 6 Way I2C Connectors and Cables are available from I2CCHIP, as well as from Farnell.
I2CCHIP can supply bulk connectors (boxes of 250) if required as well as cables, and small quantities of connectors.

#	4 Way	6 Way	
1	SDA	SDA	
2	VDD	VDD	
3	VSS	VSS	
4	SCL	SCL	
5		INT / CS	Interrupt input (active low) *or* Chip select for SPI (jumper select)
6		VAUX	Aux supply. Not connected

The reason for the power lines being between the I2C wires is to stop the edges of SDA and SCL coupling together. This follows the Philips pattern set out in section 17.3 of The I2C Bus Specification.

- If the length of the bus lines exceeds 10 cm
- This arrangement will have similar capactive loading on SDA and SCL. Where you don't use pins 5 & 6, it can be better to just use 4 wires.

	AMP www.amp.com	Farnell www.farnell.com	RS	
6 way male-on-wire	7-215083-6	149-068		
6 pin female-on board	7-215079-6	148-519		
4 pin male-on-wire	7-215083-4	149-032		
4 pin female-on-board	7-215079-4	148-507		

8 CS and Interrupt Pins

Jumpers J4,5 are provided to select the function of pin 5 of the I2C connector between IRQ (input), and CS/1Wire (i/o). This is for BUS# 2, 3 only. Bus#1 is always connected to IRQ.

If you are using the adaptor for SPI, you will need to change the jumper position to **CS** to make it an output.

Note that the IRQ pin is common to all buses it is connected to. So changing its level at one bus, will affect all of them.

9 Bus Drive and Pullups

The bus is fitted with **1k5** pullup resistors in a SIL resistor pack.

If you want to reduce or increase the current, replace the resistor pack. We recommend cutting it out with fine side cutters, removing the individual pins through the top of the board, and desoldering the holes.

Note that although Bus#3 may be pulled up to 5V, it has a diode clamp that keeps the voltage down to VDD on that bus.

The BL233 can drive much higher currents if required, 15-20mA @5V VCC. There is a 47 ohm protection resistor in series with the outputs that will need to be reduced of course.
You will need a buffer at the other end of the bus if you do this.

10 Power Supply

External power is 9-12V DC, (2.1mm centre positive).
An on board 7805 regulator is fitted to provide 5V. An HT7333 regulator provides 3.3V at up to 250mA.

If you have a Galvanic Isolated adaptor, see 11.2 below
If you want to use low voltage I2C devices (<3.3V) see: Low Voltage Regulator for Bus 3 12.1 below

- USB Bus Powered USB Data: ~50mA for I2C devices
- USB Bus Powered RS232 Data: ~50mA for I2C devices
- External Power, RS232
- External Power USB

10.1 USB Bus Powered

The USB bus can deliver up to 500mA[3]. When operating from USB, the supply voltage is normally about 4.7V. The 3.3V regulator will operate correctly from the USB supply.
Even if you are using the RS232 port, you can use a USB cable for power. Just fit the RS232 jumper to force the adaptor to ignore the usb port.
Note that USB power can be very noisy, and can go as low as 4.4V when other devices are used with unpowered hubs. Using the 3.3V regulator for the I2C may be best for USB powered applications that are noise sensitive.

10.2 I2C Bus Power Selection 5V / 3.3V

I2C Bus #1,2 are connected to the BL233B's VDD supply. J6 selects between 5V and 3.3V for the BL233B's VDD.

I2C Bus#3 has a separate VDD jumper J7. Using J7 you can operate I2C Bus#3 from either 5V or 3.3V, while Bus#1,2 are operating from 5V.

3Devices that draw > 100mA from the bus should have switched load, and in theory you should change links on the FT232, so the adaptor tells the PC that it is a high current device. See FT232BM datasheet for more detail if this matters to you.

If you leave J7 off completely, then you can power Bus#3 from another the I2C cable. Bus#3 has TTL levels and an in-built diode bus clamp, that keeps clamps the voltage on SDA and SCL to the Bus#3 VDD. This means that you can oiperate Bus#3 VDD from 2-5V

The I2C Bus VDD is connected to the interfaces VDD (5V).
To isolate an I2C Bus#1 or 2's VDD from the adaptors VDD, remove the associated 0603 link by the connector. (FB10,11)

10.3 Local AND USB Power

Boards manufactured after April 2003[4] should work happily with both external and USB power.
If you do not want the USB bus to try and power your equipment, remove D5 (by USB connector). Normally you would do this when building the I2C-2-PC into a standalone equipment that has its own 5V supply.

If you are making test systems, be aware that a short circuit, high voltages etc, that may accidentally be applied to the VDD of the I2C bus, will be connected through the USB cable to the power supply of your computer. This can reset your computer or worse. For these applications, the Galvanic Isolated option is available.

11 Galvanic Isolation

Before using a new Galvanic Isolated unit anywhere safety-critical, you should use a multimeter to verify that the input and output side of the adaptor are actually isolated. This is good practice. Note that these units have not been tested by any certifying laboratories, and we do not claim that they comply with any particular standards for isolation. It is your responsibility to ensure they are fit for purpose.

DC-DC Converters are fitted as standard to Galvanic units from mid 2015

Adaptors and Starter Kits can be ordered with Galvanic Isolation. Isolated versions have:

- Case is marked Isolated
- Isolator is fitted to pcb.
- DC-DC convertor powers I2C from USB (mid 2015 on)

4With boards manufactured before May 2003:
There are some traps to watch when using a local power source, and the USB adaptor. The USB chip will not see a power on reset when the USB Bus is connected, and local power is already applied, and may not enumerate correctly. See FTDI documentation for more reset details.

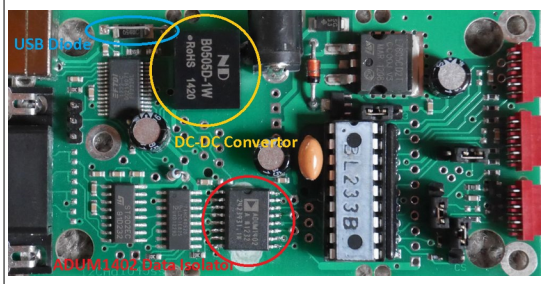

Figure 11.1: Isolated Top View

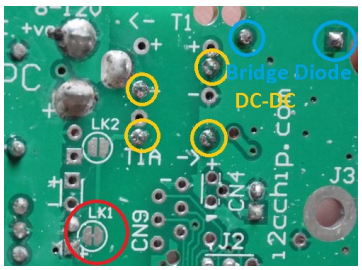

Figure 11.2: Bottom View

Figure 11.3: Normal

You should use the Galvanic Isolated version if:

- I2C side can be inadvertently short-circuited and you are using USB
- Faults at the I2C could possibly connect high voltages to any pins of the adaptor (including the ground pin)
- You don't want to ground your I2C bus to the PC chassis
- Measurements are sensitive and you need to decouple from the PC's noise, and ground currents, and earth loops.
- This is a valuable and important industrial system that should be designed to be robust.
- You need to run the I2C bus floating or above ground potential

The Analog Devices ADUM1402A[5] is used for isolation in V3 adaptors For more information see the datasheet. Creepage distance is ~2.5mm.

11.1 Fitting Isolator Yourself

If you need isolation, either mill, or chisel the bridging tracks from the isolator footprint and fit the IC.
If you use RS232, and an isolator you will need to power the RS232 section. Fit CN4, and protection diode D1 (BZX85C5V6 or C6V2)

11.2 Galvanic Isolated Power

DC-DC Converters to power the I2C from the USB power, are fitted as standard to Galvanic units from mid 2015. 1W / 200mA units are fitted. *Warning: shorting +5 can destroy the DC-DC convertor. If this may occur limit the usb supply or fit a Polyfuse to limit current to 200mA.*
The DC-DC convertor has an unregulated output, and so the exact voltage (5V) depends on both the USB supply and the load on the I2C side. To increase the I2C side ~0.3V, bridge the USB power diode shown in blue above.

5The NVE **IL716-3** magnetic isolator is used for galvanic isolation on old V2 units

On older units, you have to power the PC side separately from the I2C side. Normally USB power is used for the PC side, and an external 9V supply for the I2C side.
To use external supply (for greater current or better noise and regulation) cut LK1.

If you want to use the RS232 interface, you can still use the USB connector to provide power. Just fit the "RS232" jumper to force the interface to use RS232. (with no jumper the interface autoselects USB when the USB is connected to a computer, but not when a USB power-only cable is used)

11.3 USB Power only Cable

You can use a USB Power-only cable to power the PC side, when using RS232. This is just a USB cable with only the 2 power wires fitted. Just cut the end off a Usb cable. Normally the power wires are red and blue, and thicker than the data wires.

11.4 External 5V to PC Side

If you are not using USB power, fit 2 pin connector CN4 and protection zener D1 (BZX85C5V6 or BZX85C6V2).
The PC side requires 4-5V, 30mA.
See the wires in Figure 5 below

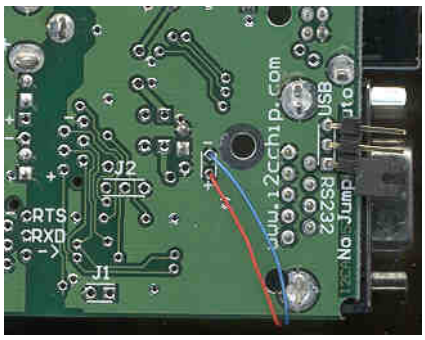

Figure 11.4:

11.5 Fitting a DC-DC Convertor

If you want to power one side of the isolation barrier from the other, you can fit a 5V-5V DC-DC convertor module.

Part#	Manuf.	Digikey	Future Elx	Mouser
PDS1-S5-S5-D	CUI	102-2757-ND		
CME0505-DC	Murata	811-2893-5-ND		580-CME0505DC
B0505D-1W	Nengda			

The dc-dc convertor is 5V-5V, Single Output, DIP 8 pin(has 4pins)

Adaptors made after 2011 have pads to fit a standard DIP convertor, next to the DC Jack, marked T1 on the silkscreen. The pads are slightly confusing, as you can fit the DC-DC convertor module either way around. The arrows on the silkscreen show you which way the power flows.

- Fit as T1 powers I2C side from USB side. (Pin 1 on USB side, see Figure 12 Isolated Top View above)
- Fit as T1A powers RS232/USB side from DC power jack (I2C side, Pin1 on I2C side)

If you wish to fit another type of convertor, just wire to the pads labeled +/- in the T1 footprint.
Links LK1 and LK2 select the input to T1A. Use LK2 if you have a 9V in, 5V out type convertor.

11.6 Defeating Isolation

If you don't need the isolation you can simply remove the DC-DC convertor and join VCC and GND across the DC-DC convertor holes.
Beware of forgetting that the isolation is gone! Mark the case Not Isolated!

12 Other Modifications

12.1 Low Voltage Regulator for Bus 3

Bus 3 will support low voltages. See i2cad_Using_Low_Voltage_Devices.pdf. You can fit an extra regulator U9, Microchip MCP1700-XX-T0 or Holtek HT73XX if you want voltages other than 3.3 and 5V. This is a TO-92 style regulator for easy fitting.

If you fit optional internal regulator U9, leave J7 off.

When VDD is 5V, Bus 3 can be as low as 2.5V. When VDD is 3.3V, Bus 3 can be as low as 1.8V.

12.2 Daughter Board Connector

I2C2PC can be used as a daughter/mother board that plugs onto another board, instead of using cables from the I2C Bus.

A 12 pin SIL 0.1" pitch connector CN10 can be fitted from either top or bottom side of the PCB.

VCC is 5V or 3V3 as selected by J6.
VCC3 is the output of the 3V regulator.

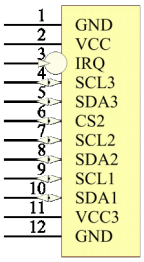

Figure 12.1: CN10 Pinout

If the adaptor has USB power or external power, VCC can be used to power the external module. Alternatively you can feed 5V *into* VCC *from* CN10.

See the ***Mechanical drawing*** at end for details of the position and mounting holes. DXF and Altium PCB files are available.

12.3 USB Leds and Power Led

USB-RX (led1) and USB-TX (led2) leds can be fitted if you want. Use 5V built-in resistor type leds (or use 3mm leds + 330 ohm resistors). These LEDs flash briefly when data is sent or received through the USB bus. They are useful for debugging purposes. Led3 is a power LED. V4 adaptors have plain pads on the top side for these signals. (Earlier adaptors had holes for LEDs)

12.4 USB EEProm

USB info can be set using FTDI utilities. This will let you enumerate the device as something other than a generic usb/serial adaptor, as well as setting special information such as current consumption.
Boards manufactured before 2011 use FT232B, and require the 93C46B EEProm to be fitted to the pcb. Post 2011 boards use FT232R and have built in eeprom.

Some customers have reported that Windows XP does not correctly handle multiple adaptors on the same USB, and that this may be fitted, and a unique serial number set. Later (post 2011) FT232R boards have unique serial numbers by default.

13 Example Applications

See the http://www.i2cchip.com for more examples.

There are application notes that clarify specific applications, and other information in the PDF Library

13.1 8 Bit I/O Port

Use a Philips PCF8574 or Onsemi JLC1562. See
http://www.i2cchip.com/pcf8574.html for i/o boards and keyboards.

Figure 13.1

13.2 Simple Data logger with no PC Software

Use a Philips PCF8591 4 channel 8 bit A-D chip.
Store this macro in the EEProm at location 0. It will run automatically at power on, sending 4 channels of A-D data in hex, followed by LF

```
S90 04 R04 T0A L0200 >00
```

[Start][address 0x90 (8591)][Control register=0x04][Read 4 channels of A-D] [Type LF (linefeed)][delay 512 ms][goto start]
Capture the data to file with Realterm.
Plot it with Excel, Matlab etc.

13.3 Simple RS232 I/O Port

The I2C-2-PC can be used directly as an 8 bit I/O port with a 1 bit IRQ input. No I2C or SPI chips are needed at all. This is ideal for connecting relays, lights and switches to a PC.

```
O OF
```

[write 0x0F direct to pins]

```
Q
```

[read pins]

```
?
```

[read IRQ input]

13.4 RS232 to LCD Module adaptor

A single PCF8574 can drive a standard LCD module. This circuit is available built up.

13.5 Huge RS232 Parallel Port

To get are large number of cheap and easy output pins with good drive capability, use the SPI output, and 74HC4094 shift registers. Eg a 32 bit output with 4x 4094's.
SDA4 is used as STB for the 4094's

```
G3 Y01020408 OFFFD OFFFC
```

[select bus3][send 4 bytes to 4094's][pulse STB pin to latch data] nb **O** not zero

13.6 Reading a DS2401 1 Wire serial number

To read a DS2401 serial number

```
GC S ? W33 R04
```

[Select 1 wire bus#1 (bus #C)][Start(reset)][Get status to check presence][ReadRom Command][Read 4 bytes of rom data]
Since Start can be followed immediately by write data, a shorter version is:

```
GC S 33 R04
```

[Select 1 wire bus#1][Start][ReadRom command][read 4 bytes]

14 USB

USB requires the Virtual Comport drivers for Windows. For other operating systems see http://www.ftdichip.com/Drivers/VCP.htm

USB introduces latency that may affect your software design. See AN232B-04 Data Throughput, Latency & Handshaking

This latency affects *all* USB devices. To avoid it you should structure your software to decouple the commands you send from the data coming back. ie you send as many commands as possible to the BL233, then you process the data as it returns. If you send a command, then wait for each response, performance can be very poor.

Just because USB runs at 12Mbps does not mean it really works fast. RS232 may perform better in practice. This is why we provide *both* interfaces.

The USB configuration in EEProm can be changed so that it enumerates as a special device rather than a virtual comm port. FTDI utilities can be provided to do this
FTDI provides D2XX DLL Drivers are to directly access the USB interface.
http://www.ftdichip.com/Drivers/VCP.htm
We recommend using the Virtual Comm Port approach, as you retain the flexibility to use RS232 with no software changes.

14.1.1 Changing Comport Numbers

Keep the adaptor on the same port of the computer / hub, to avoid the comport number jumping around.

14.2 Should I use USB or RS232?

If you are making test systems or otherwise require reliability and performance, we recommend that you try and use a real serial port, rather than USB. Reliability does not depend on drivers, and on other USB devices being connnected and disconnected

from the computer. The Comport number will not move around. Latency is reduced, and more reliable.

15 FAQ

The BL233 datasheet is the place to find answers to all your software questions!

Can I use SMBUS chips
Yes. SMBUS chip will usually operate directly. SMBus chips have timeout, so you may not be able to type commands from the keyboard. Use the Realterm SEND tab, Using the ":" command in your programs may be a good idea.

Can I mix 5V and 3V IC's?
Yes. Bus# 3 has TTL Levels. You can have bus 1&2 at 5V and bus 3 at 3.3V

Can I use 2.5V or 1.8V I2C.
Yes – on Bus 3. See i2cad_Using_Low_Voltage_Devices.pdf

My adaptor doesn't work. I have Galvanic Isolation.
(Before mid 2015) You have to power the PC side ***and*** the I2C side separately. See Isolation section 11.2

Will your product continue to be available.
Yes it is a sucessful product with a growing market. We have seen many competitors come and go. Importantly, our ASCII command approach is futureproof against changes in OS's and programming fashions. You will *never* me reliant on us updating drivers or DLL's to keep using the system.

USB is really slow?
Latency is an issue. See USB section 14

The data is gobbledygook.
First use Realterm to test the adaptor. Make sure the baud rate is correct (57600 is default) and that you are using RTS/CTS handshaking. Once you have used Realterm to send commands successfully and found out what the returned data is, you are ready to start writing your software.

Realterm doesn't do XXXX
Try the latest development version of Realterm at http://www.i2cchip.com/realterm

Does it work with Labview?

Yes. Labview has good serial support

Does it work with Linux / Solaris / Mac
Yes. No special drivers are required. You will probably find it easier to use the rs232 interface.
Does it work with iOS / Android?
Get the BluetoothLE adaptor.
If your Android device has OTG you may be able to use the FTDI serial.
Another options is our WebI2C solution that gives you Wifi/LAN/Web access

How do I interface to a Wireless Router.
We now have a product WebI2C, based on an OpenWRT Router, ask for more details.
Most routers such as the Linksys RTA54G have a logic level serial port. This can be connected directly to the AUX port. You may need to put 4k7 resistors in series for level shifting.
Some routers (eg ASUS) have a USB port, and may have be able to work with the USB-Serial interface.

16 Factory Test Procedure

This is the factory test procedure:

16.1 Visual Inspection

Inspect paying close attention to all leaded solder joints.

16.2 DC Supply current and Power supply

Set PSU to 0V.
Connect to DC socket.
Increase supply voltage *slowly* to 8V, whilst measuring the 5V line across D2, and watching for excessive current (>50mA)
Check supply voltage on BL233B is between 4.75 and 5.25V
Change jumper J6 to 3V position, check voltage is 3.2-3.4V

16.3 RS232

Install RS232 jumper
Connect RS232 cable and set terminal program to nominal baud rate (normally 57600)
Connect power to adaptor
Terminal should display "HI I2CAD V118" or similar. Note that once the EEProm has been changed this may no longer be true.

Type "?". Board will reply with 2 chars eg 18

Remove jumper (auto-select).
Type "?" again and check still works

16.4 USB

(Note that FTDI USB/serial adaptor drivers may need to be installed first time)
Remove RS232.
Plug in USB.
Type "?" and check response.
In case of problems check the USB RX and USB TX LED positions with an oscilloscope. These pulse low when chars are received or sent. Note that you won't see the "HI I2CAD V118" power on message through the USB port as the USB connection is not enumerated yet, when the BL232 starts.

16.5 I2C Bus 1

Connect the test PCF8574 board to I2C Bus1.
Type "S42F0P"
Half the leds will come on

16.6 I2C Bus 2

Connect the test PCF8574 board to I2C Bus1.
Type "G2" to change to I2C Bus 2
Type "S42F0P"
Half the leds will come on

16.7 INT Pin

Put jumpers J4,5 in INT position
Send ?. Reply is "18"
Hold down a button on 8574 board.
Send ?. Reply is "08"
Check for 3 busses

17 RoHS, Reach, & Lead Free

I2C2PC RoHS/Lead Free are being supplied globally from October 2007.
BL233_B supplied after October 2005 are RoHS/Lead Free. See Certificate of Compliance

18 Ordering Information

19 OEM Versions

It is available as a bare board in OEM packs.
See Mechanical PCB and DXF files for mounting hole positions.
Special builds are also available for volume orders.

- RS232 only
- USB only
- Waterproof metal box
- other voltages

19.1 RS232/USB to TTL Interface

We supply this board for use as a built up serial interface to customers TTL level devices. Contact us for pricing.
CN2 connects to your device and can power it.

Pin#	Direction	Function
1		V+
2	From PC	TTL RTS
3	From PC	TTL TXD
4	To PC	TTL RXD
5	To PC	TTL CTS
6		0V

20 Schematics and Drawings

Schematics and Drawings should be embedded below. If they have been omitted please email: sales@i2cchip.com

21 Revision History

CN2 connects to your device and can power it.

Rev	Date	Changes
69	15 Sept 2015	Add DC-DC convertor photos etc
70	14 Jan 2015	Sign PDF, add rev history

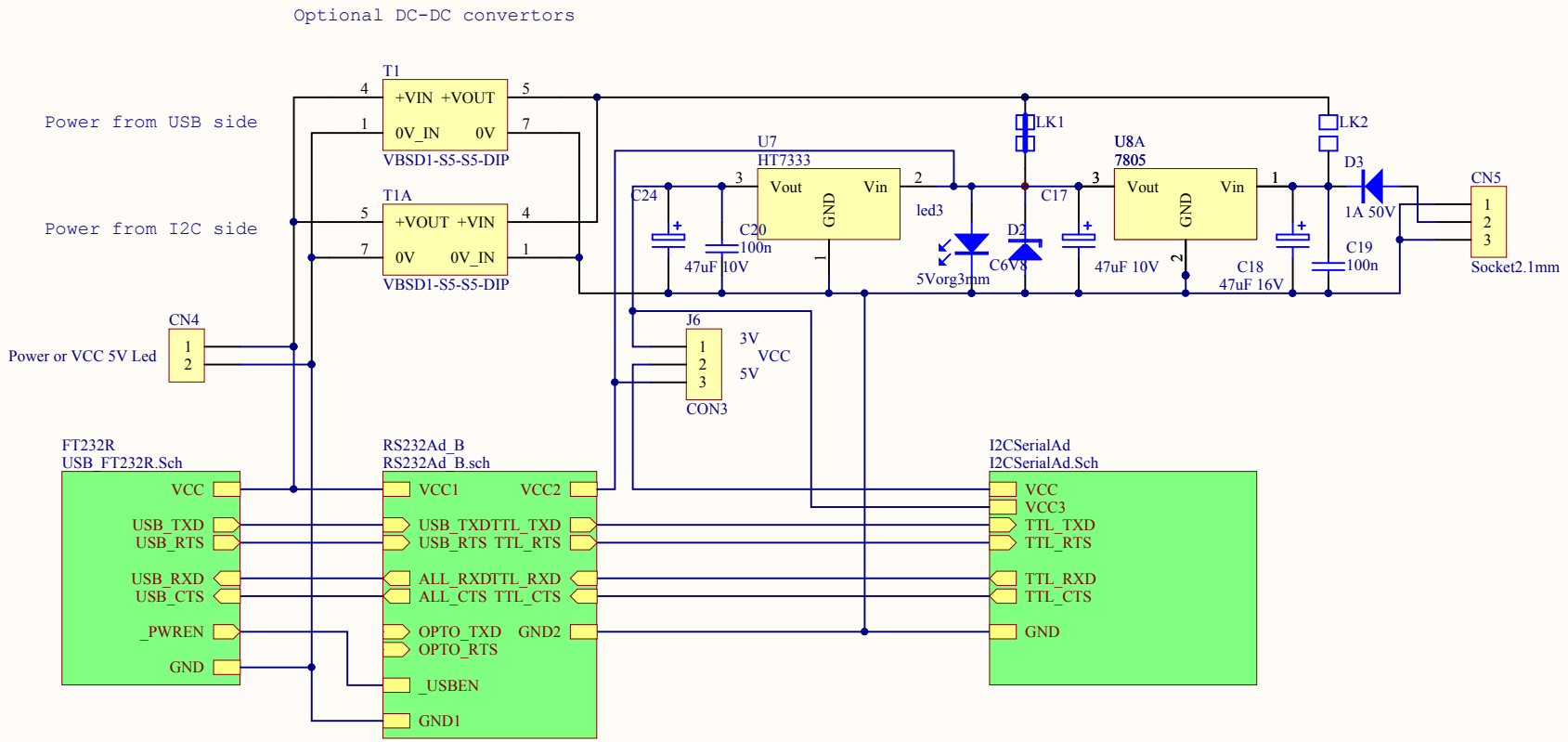

Title	I2C-2-PC Adaptor V3	
Size: A4	Number	Revision
Date: 9/13/2015		Sheet of
File: C:\cad\..\I2CAD.sch		Drawn By:

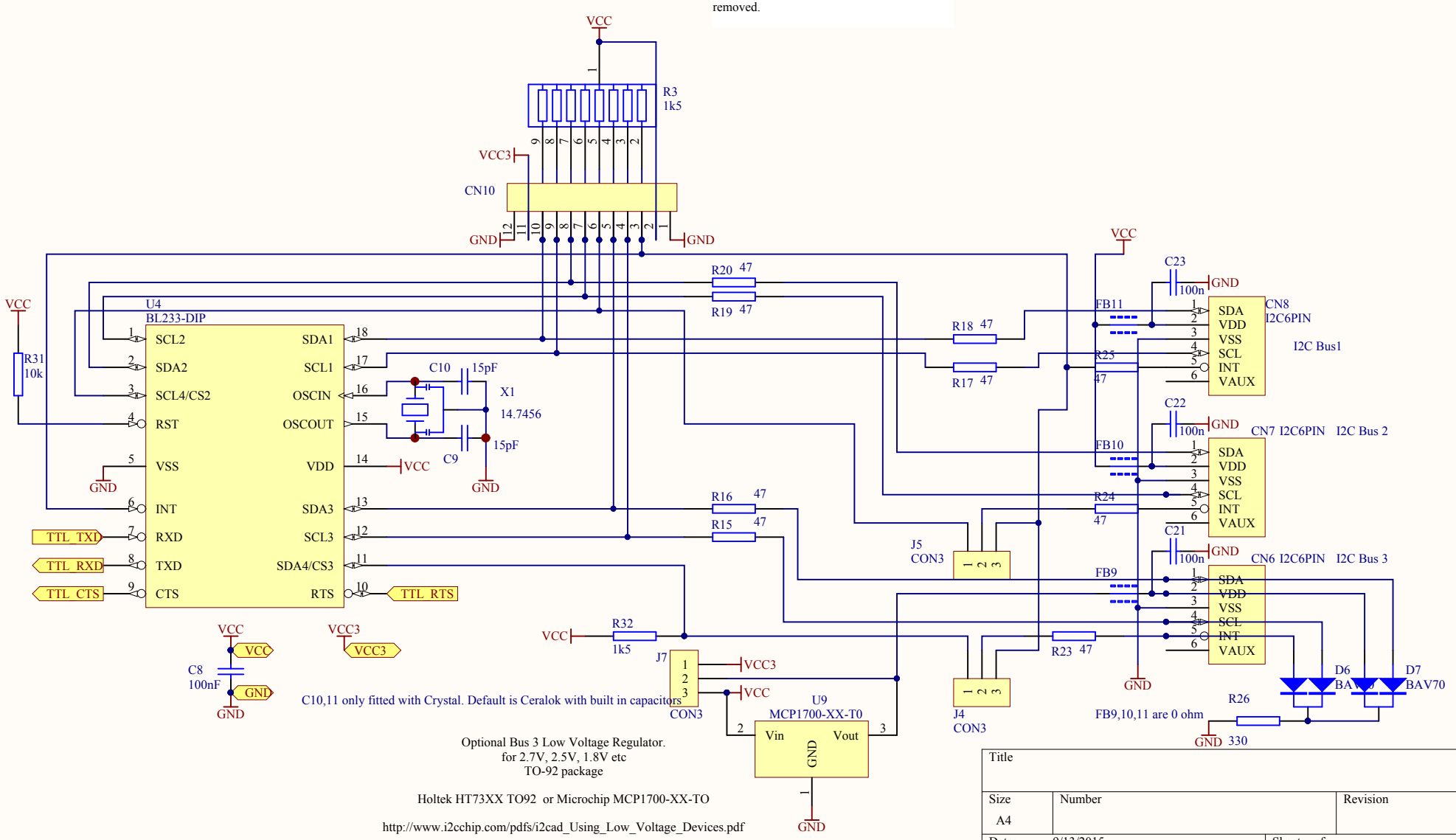
Bus 1&2 can have either Constant-Current or Resistive pullups. From the factory, resistive pullups are standard.
EITHER:
Use 9 pin R3 resistive pull-ups (default)
OR
Fit constant current generators (Q1,2+resistors) and R3 with last 2 pins removed.
VCC
R3
1k5
VCC3
CN10
GND
GND
U4
BL233-DIP
SCL2
SDA2
SCL4/CS2
RST
VSS
INT
RXD
TXD
CTS
SDA1
SCL1
OSCIN
OSCOUT
VDD
SDA3
SCL3
SDA4/CS3
RTS
TTL_TXD
TTL_RXD
TTL_CTS
TTL_RTS
R31
10k
R20 47
R19 47
R18 47
R17 47
R16 47
R15 47
C10 15pF
X1
14.7456
C9 15pF
R32
1k5
J7
CON3
VCC3
VCC
U9
MCP1700-XX-T0
Vin
Vout
GND
C8
100nF
C10,11 only fitted with Crystal. Default is Ceralok with built in capacitors
Optional Bus 3 Low Voltage Regulator.
for 2.7V, 2.5V, 1.8V etc
TO-92 package
Holtek HT73XX TO92 or Microchip MCP1700-XX-TO
http://www.i2cchip.com/pdfs/i2cad_Using_Low_Voltage_Devices.pdf
J5
CON3
J4
CON3
C23
C22
C21
100n
FB11
FB10
FB9
R25
R24
R23
47
CN8
I2C6PIN
I2C Bus1
CN7 I2C6PIN I2C Bus 2
CN6 I2C6PIN I2C Bus 3
SDA
VDD
VSS
SCL
INT
VAUX
D6
D7
BAV70
R26
330
FB9,10,11 are 0 ohm
Title
Size
A4
Number
Revision
Date: 9/13/2015
File: C:\cad\..\I2CSerialAd.Sch
Sheet of
Drawn By:

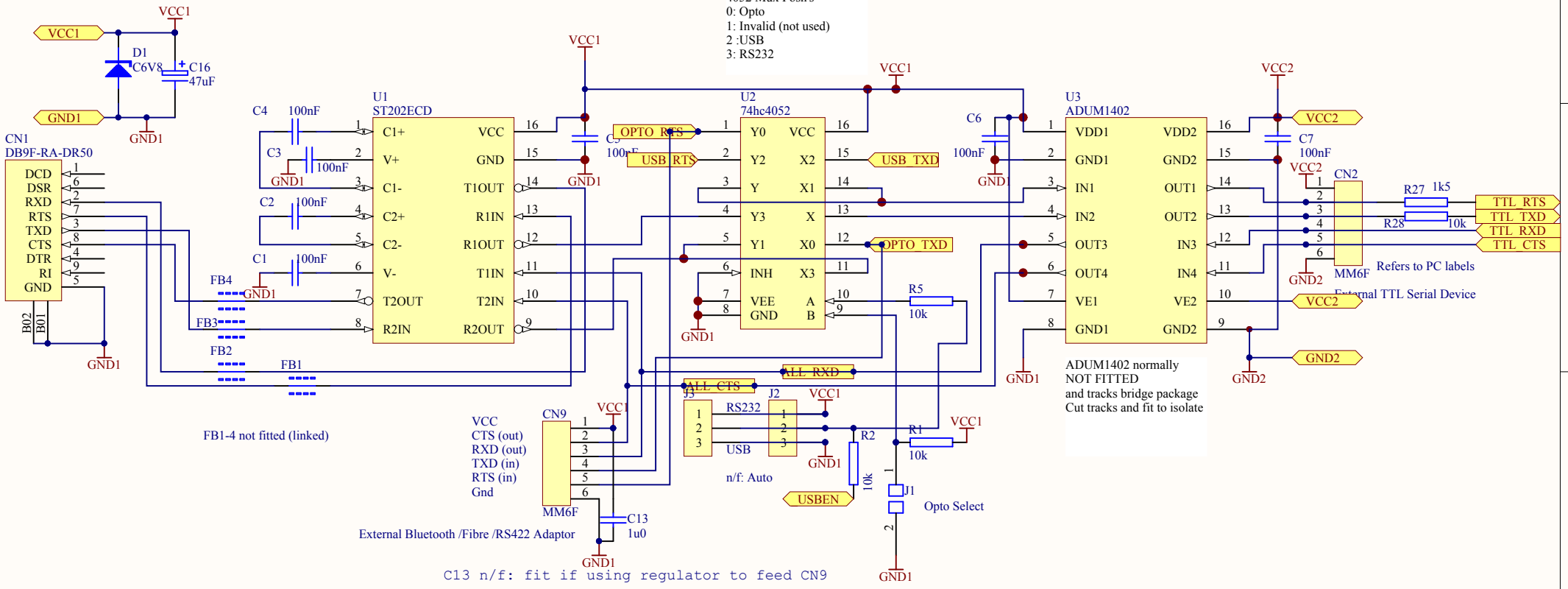

Title		
Size A4	Number	Revision
Date: 9/13/2015		Sheet of
File: C:\cad\..\RS232Ad_B.sch		Drawn By:

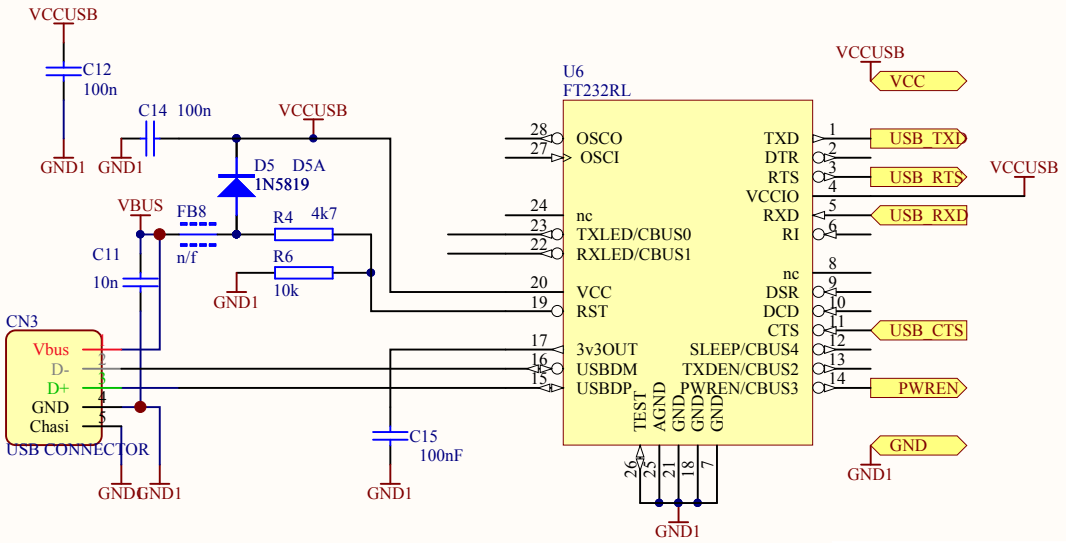

PWREN is Active Low.
Prevously USBEN was active hi,
on FT8U232A

Title		
Size: A4	Number	Revision
Date: 9/13/2015		Sheet of
File: C:\cad\..\USB_FT232R.Sch		Drawn By:

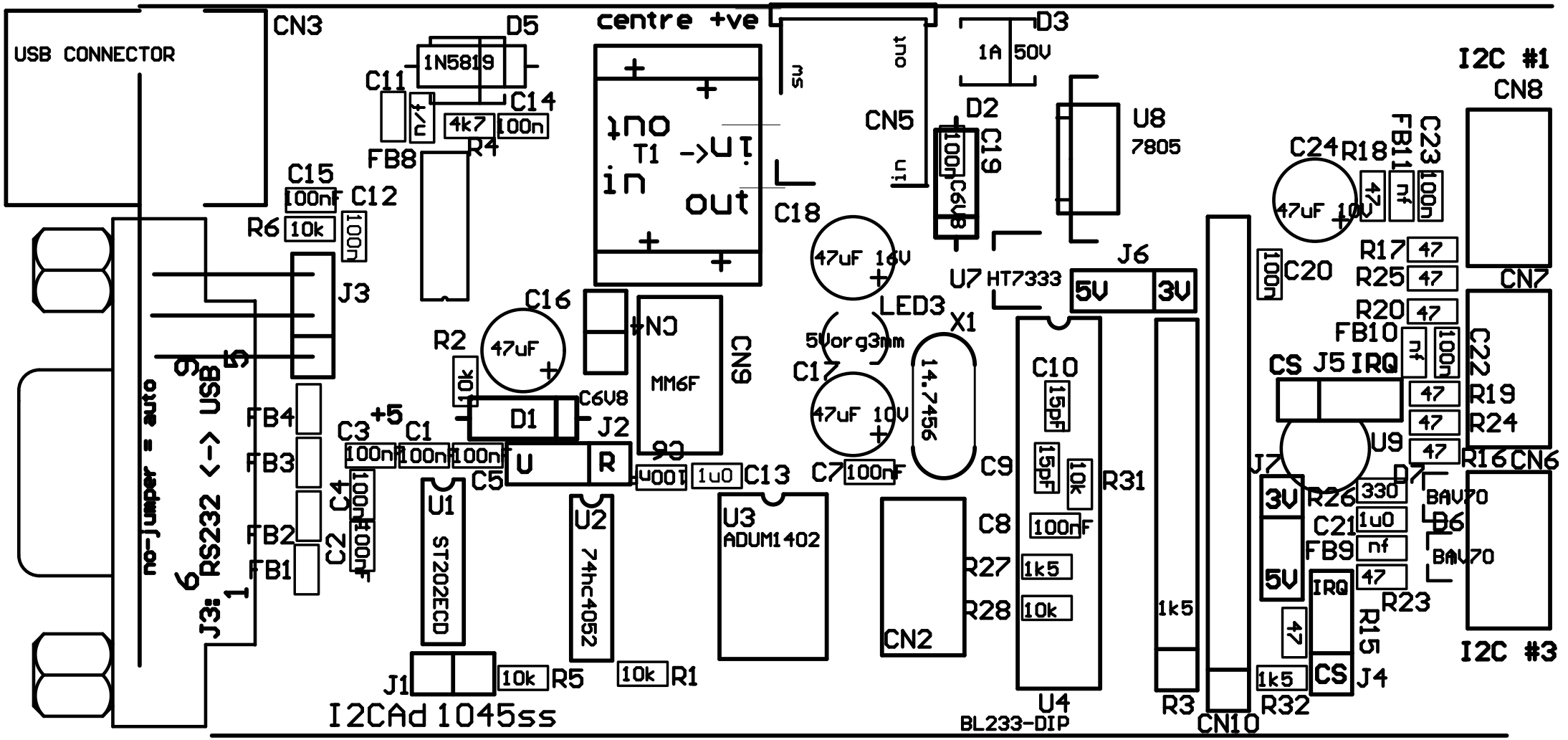
USB CONNECTOR
CN3
D5
1N5819
C11
n/f
C14
4k7
100n
FB8
R4
C15
100nF
C12
R6
10k
100n
J3
no-jumper = auto
J3: RS232 <-> USB
FB4
FB3
FB2
FB1
C3
+5
C1
100n
100n
100n
C4
100nF
C2
100nF
C16
47uF
R2
10k
D1
C6V8
J2
U
R
C5
U1
ST202ECD
J1
10k
R5
10k
R1
U2
74hc4052
centre +ve
T1
in
out
C18
CN4
MM6F
CN9
C6
100nF
1u0
C13
U3
ADUM1402
sw
out
in
CN5
D2
C19
100nF
C6V8
47uF 16V
LED3
5Vorg3mm
C17
47uF 10V
X1
14.7456
C7
100nF
C9
C8
R27
R28
CN2
D3
1A 50V
U8
7805
U7
HT7333
J6
5V
3V
C10
15pF
15pF
10k
R31
100nF
1k5
10k
U4
BL233-DIP
1k5
R3
CN10
C20
100n
C24
47uF 10V
R18
47
FB11
nf
C23
100n
R17
47
R25
47
R20
47
FB10
nf
100n
C22
CS
J5
IRQ
47
R19
47
R24
47
U9
R16
CN6
J7
3V
5V
R26
330
D7
BAV70
C21
1u0
D6
FB9
nf
BAV70
IRQ
47
R23
47
R15
CS
J4
1k5
R32
I2C #1
CN8
CN7
I2C #3
I2CAd 1045ss

Mechanical Details of I2C2PC Bare Board

Boards manufactured from 2011

Only 3 mounting holes (3.2mm) and CN10 are used
4 pillar holes are 6.25mm and are not used for mounting

Other components and outlines are for information

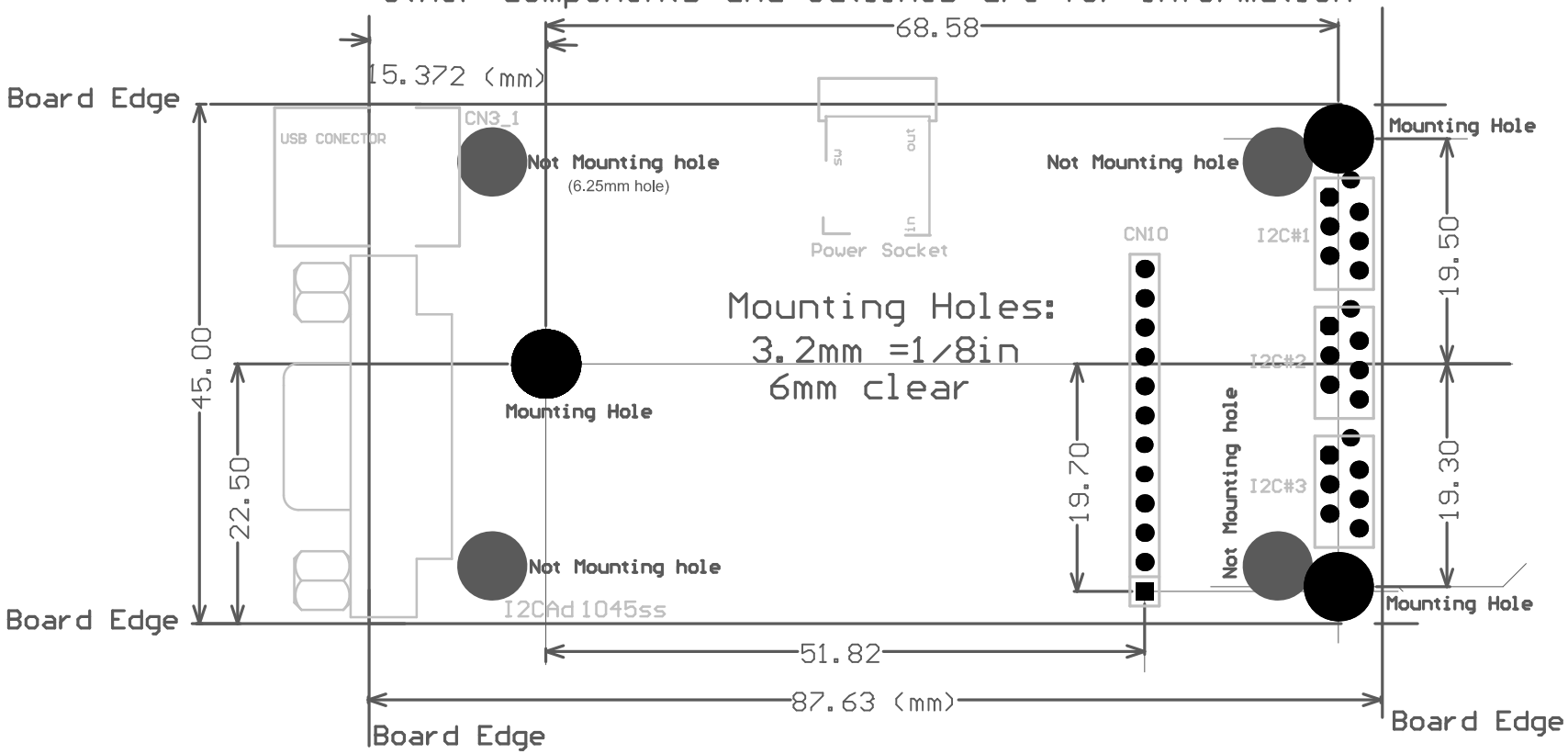

DXF and Altium Designer PCB files are in I2C2PC documentation zip file